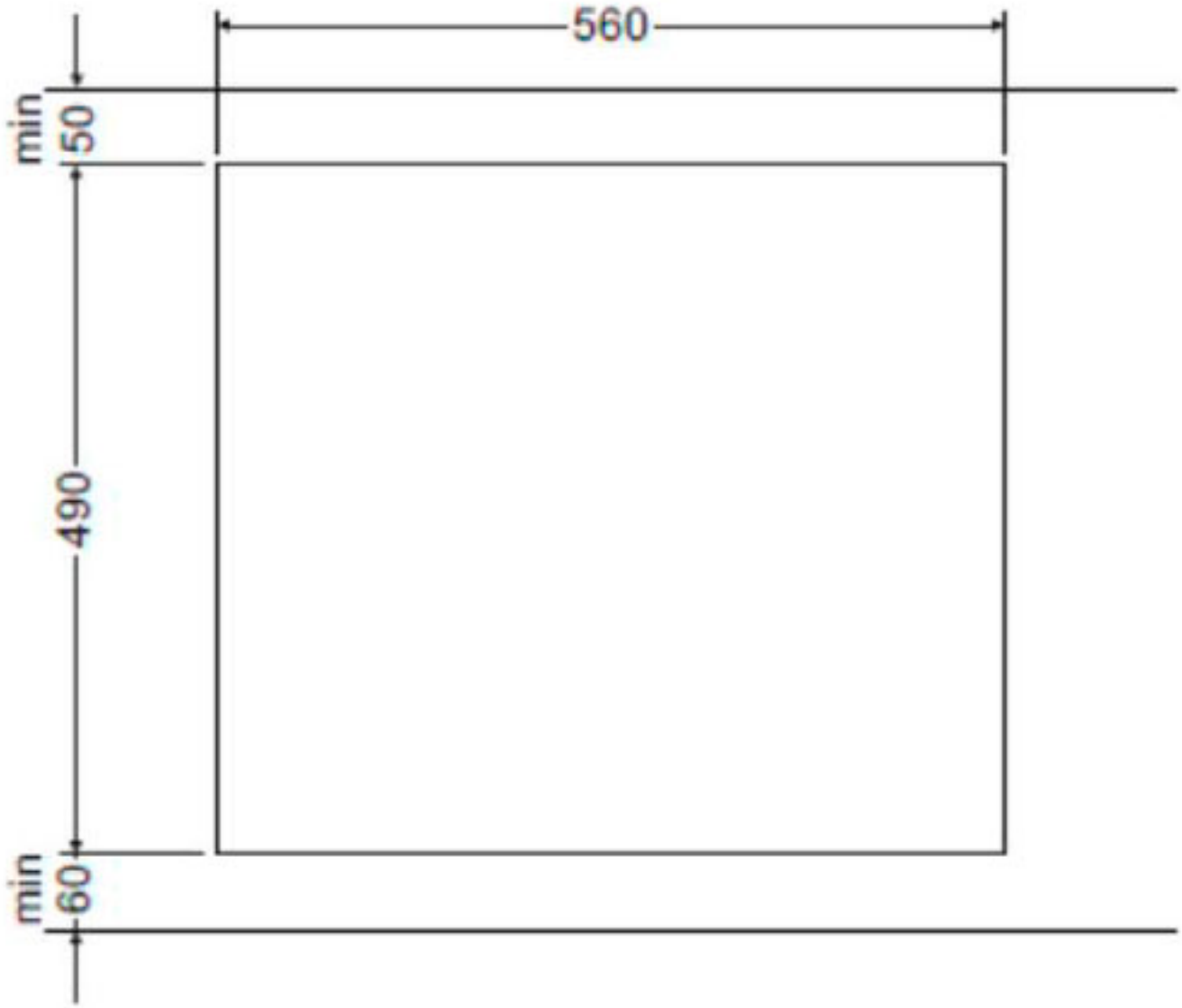
560
min
50
490
min
60

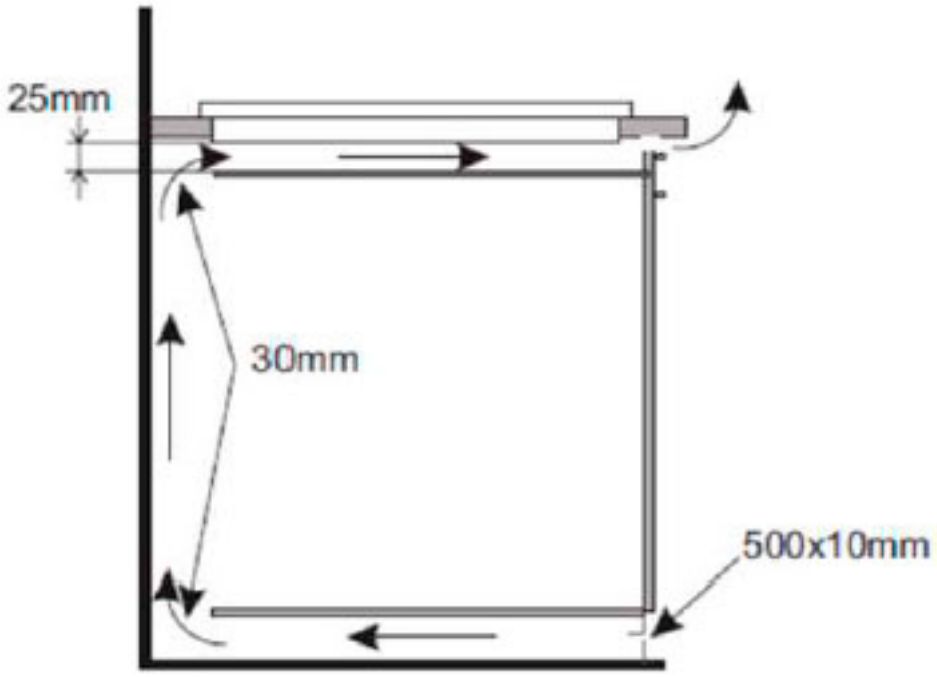
25mm
30mm
500x10mm